Cert. No. LRQ 0963008

ISO 9001

spirax sarco

TI-P374-01
CH Issue 2

SPIRA-TROL
DN15 to DN100
KE, KF and KL Two-port Control Valves

Description

SPIRA-TROL is a range of two-port single seat globe valves with cage retained seats conforming to EN standard. These valves are available in three body materials in sizes ranging from DN15 to DN100. When used in conjunction with a pneumatic or electric linear actuator they provide modulating control or on/off service.

SPIRA-TROL valve characteristic - options:

KE	**Equal percentage (E) -** Suitable for most modulating process control applications providing good control at all flowrates.
KF	**Fast opening (F) -** For on/off applications only.
KL	**Linear (L) -** Primarily for liquid flow control where the differential pressures across the valve is constant.

Important note: Throughout this document, reference has been made to the standard KE control valve. With the exception of trim type, the KE, KF and KL control valves are identical.

SPIRA-TROL valve options:

Stem sealing	**PTFE chevron seals**	Standard
	Bellows / PTFE (B)	Suitable for thermal fluids
	Bellows / graphite (C)	Suitable for thermal fluids
	Bellows / graphite secondary seals (D)	Zero emissions and high temperature applications
	Graphite packing	High temperature applications
Seating	**Metal-to-metal**	431 stainless steel - standard
		316L stainless steel
	Soft seating	Up to 200°C - PTFE for Class VI shut-off
		Up to 250°C - PTFE for Class VI shut-off
	Hard facing	316L stainless steel with Stellite 6 facing - for more arduous applications
Bonnet type	**Standard bonnet**	
	Extended bonnet for large pipe lagging or hot / cold applications	
Trim	**Standard trim**	
	Low noise cage	

SPIRA-TROL two-port control valves are compatible with the following actuators and positioners:

Electric	EL3500, EL5600 and EL7200 series
Pneumatic	PN1000 and PN9000 series
Positioners	PP5 (pneumatic) or EP5 (electropneumatic)
	ISP5 (intrinsically safe electropneumatic)
	SP200is, SP400, and SP500 (microprocessor based electropneumatic)
	SP300 (digital communications)

Refer to the relevant Technical Information sheet for further details.

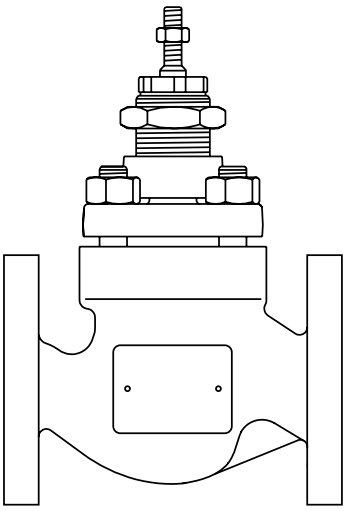

Technical data

Plug design		Parabolic
Leakage	Metal-to-metal	Class IV
	Soft seal	Class VI
Rangeability		50:1
Travel	DN15 to DN50	20 mm
	DN65 to DN100	30 mm

Typical flow characteristic curves

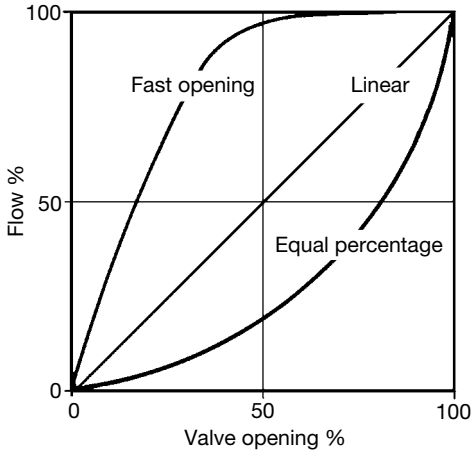

Sizes and pipe connections

Type	Body material	Connections	Size range
KE43	Cast steel	Flanged PN25, PN40, JIS 20 and KS 20	DN15, DN20, DN25, DN32, DN40, DN50, DN65, DN80 and DN100
KE61	Stainless steel	Screwed BSP	DN15, DN20, DN25, DN32, DN40 and DN50
KE63	Stainless steel	Flanged PN25, PN40, JIS 20 and KS 20	DN15, DN20, DN25, DN32, DN40, DN50, DN65, DN80 and DN100
KE71	SG iron	Screwed BSP	DN15, DN20, DN25, DN32, DN40 and DN50
KE73	SG iron	Flanged PN16, PN25, JIS 10 and KS 10	DN15, DN20, DN25, DN32, DN40, DN50, DN65, DN80 and DN100

Note: The PN16 flanges for the DN65 KE73 sizes have 4 bolt holes as standard; 8 bolt holes are available on request.

Local regulations may restrict the use of this product to below the conditions quoted.
In the interests of development and improvement of the product, we reserve the right to change the specification without notice.

Materials

Type	No.	Part		Material
KE43	1	Body		Cast steel BS EN 10213 GP240GH+N (1.0619N)
	2	Bonnet	DN15 to DN50	Forged steel EN 10222-2 P305GH 1.0436
			DN65 to DN100	Cast steel BS EN 10213 GP240GH+N (1.0619N)
	2a	Bonnet extension		Cast steel BS EN 10213 GP240GH+N (1.0619N)
	2b	Bellows		Stainless steel
	3	Stem lock-nut		Stainless steel
KE61 KE63	1	Body		Stainless steel DIN GX5 CrNiMO 19-11-2 1.4408
	2	Bonnet		Stainless steel DIN GX5 CrNiMO 19-11-2 1.4408
	2a	Bonnet extension		Stainless steel DIN GX5 CrNiMO 19-11-2 1.4408
	2b	Bellows		Stainless steel
	3	Stem lock-nut		Stainless steel
KE71 KE73	1	Body		SG iron EN-GJS-400-18u-LT
	2	Bonnet		SG iron EN-GJS-400-18u-LT
	2a	Bonnet extension		Cast steel BS EN 10213 GP240GH+N (1.0619N)
	2b	Bellows		Stainless steel
	3	Stem lock-nut		Stainless steel
All versions using PTFE seals	2c	Extended bonnet		Stainless steel AISI 316L
	4	Bonnet gasket		Reinforced exfoliated graphite
	5	Seat retainer		Stainless steel 316L
	6	Valve seat ring		Stainless steel
	7	Seat gasket		Reinforced exfoliated graphite
	8	Valve plug and stem		Stainless steel
	9 *	Lower stem guide		Glass filled PTFE
	10	Lower stem wiper		PTFE
	11*	Packing guard washer		Stainless steel 316L
	12*	Spring		Stainless steel
	13	Packing spacer		Stainless steel 316L
	14*	Chevron packing set		PTFE
	15*	Outer 'O' ring		Viton B
	16*	Upper stem guide		Glass filled PTFE
	17*	Inner 'O' ring		Viton
	18	Gland nut		Stainless steel
	19	Scraper ring		PTFE
	20	Actuator clamp nut		Plated carbon steel
	21	Bellows assembly		Stainless steel AISI 316Ti + 316L
	22	Bonnet extension gasket		Reinforced exfoliated graphite
	23	Top plate (used on bonnet extension only)		Stainless steel 316L
	24	Lower spindle bearing housing		Stainless steel 316L
	25	Lower spindle bearing		Stellite 6 or stainless steel for KE - 43171/73
	26	Spindle lock and anti-rotation nut		Stainless steel 316L
	27	Standard bonnet nuts	KE4_ and KE7_	Steel BS 3692 Gr. 8
			KE6_	Stainless steel DIN ISO 3506 A2 – 70
		High temperature bonnet nuts	KE4_ and KE7_	Stainless steel DIN ISO 3506 A2 – 70
			KE6_	Stainless steel DIN ISO 3506 A2 – 70
	28	Standard bonnet studs	KE4_ and KE7_	Steel BS 3692 Gr. 8.8
			KE6_	Stainless steel DIN ISO 3506 A2 – 70
		High temperature bonnet studs	KE4_ and KE7_	Steel DIN ISO 3506 A2 – 70
			KE6_	Steel DIN ISO 3506 A2 – 70

Not Shown

* Graphite packing

High temperature packing	9	Upper and lower stem guide	Stellite 6
	16		
	14	Grafoil packing	Graphite rings
	11	Not used	
	12		
	15		
	17		
	19		

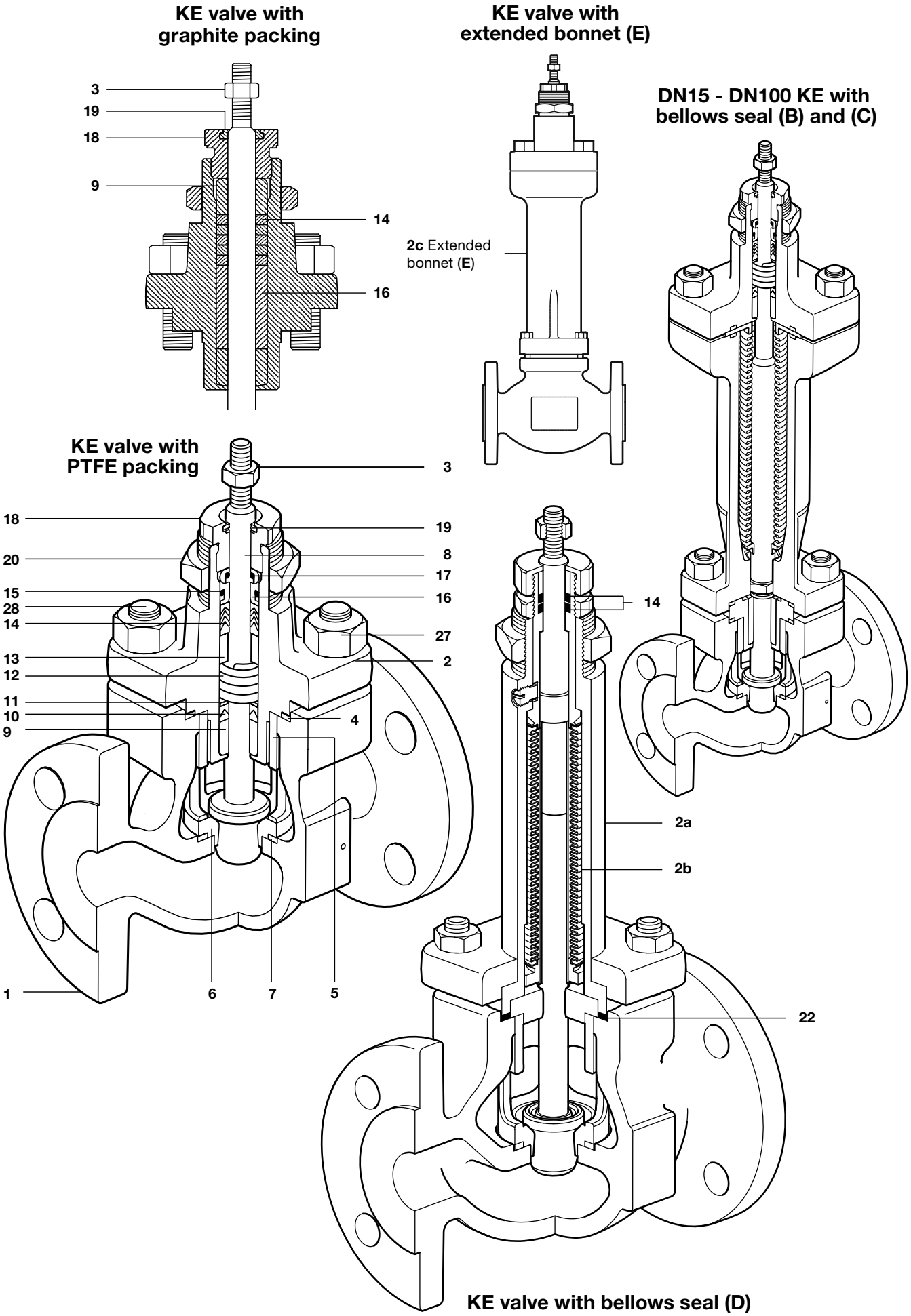
KE valve with graphite packing
3
19
18
9
14
16
KE valve with extended bonnet (E)
2c Extended bonnet (E)
DN15 - DN100 KE with bellows seal (B) and (C)
KE valve with PTFE packing
3
18
19
20
8
17
15
16
28
14
27
13
2
12
11
10
4
9
1
6
7
5
14
2a
2b
22
KE valve with bellows seal (D)

Pressure / temperature limits - Valve body

The product **must not** be used in this region.

High temperature packing is required for use in this region.

High temperature bolting and packing is required for use in this region.

Notes:

1. Where the process fluid temperature is sub-zero and the ambient temperature is below +5°C, the external moving parts of the valve and actuator must be heat traced to maintain normal operation.
2. When selecting a valve with a bellows sealed bonnet, the pressure / temperature limits of the bellows must be read in conjunction with the valve pressure / temperature limits shown below.

KE43

(Cast steel)

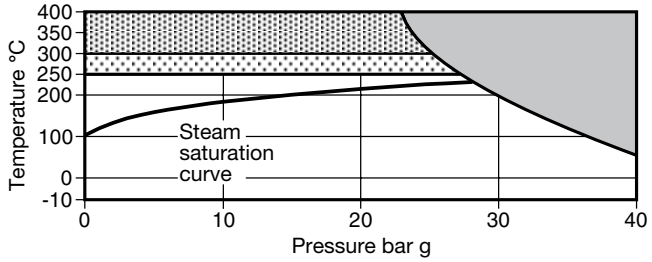

KE61
KE63

(Stainless steel)

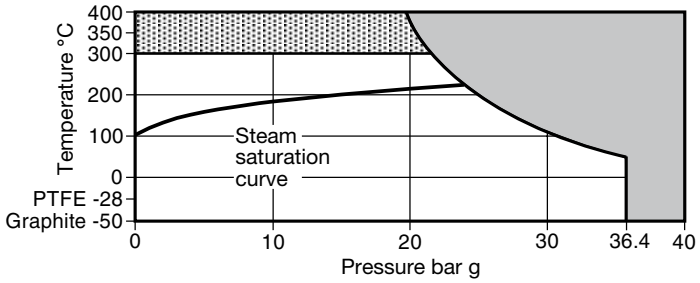

KE71
KE73

(SG iron)

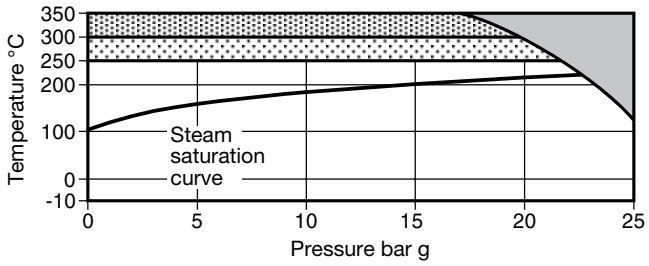

Pressure / temperature limits - Bellows

Note: When selecting a valve with a bellows sealed bonnet, the pressure / temperature limits of the bellows must be read in conjunction with the valve pressure / temperature limits shown above.

Bellows B

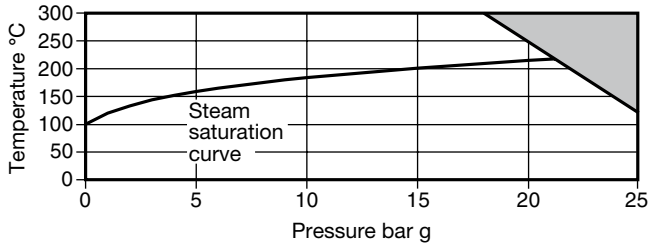

Bellows C

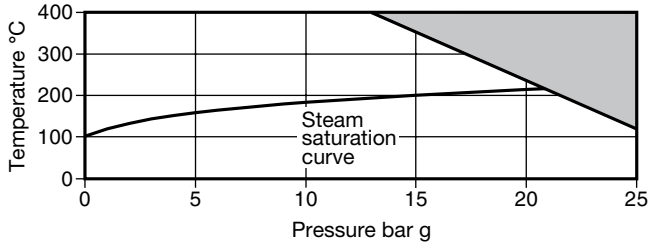

Bellows D

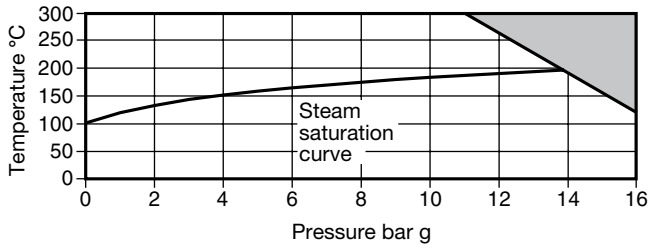

Pressure / temperature limits

Body design conditions	KE4_		PN40
	KE6_		PN40
	KE7_		PN25
Maximum design pressure	KE4_		40 bar g @ 50°C
	KE6_		36.4 bar g @ 50°C
	KE7_		25 bar g @ 120°C
Maximum design temperature	KE4_		400°C
	KE6_		400°C
	KE7_		350°C
Minimum design temperature	KE4		-10°C
	KE6_		-50°C
	KE7_		-10°C
Maximum operating temperature	Standard packing PTFE chevron		250°C
	PTFE soft seat (G)		200°C
	PEEK soft seat (K)		250°C
	High temperature packing (H)		400°C
	Extended bonnet (E) with PTFE chevron		250°C
	Extended bonnet (E) with graphite packing		400°C
	Bellows (See bellows pressure / temperature rating on page 4)		400°C
Minimum operating temperature **Note:** For lower operating temperatures consult Spirax Sarco.	KE4		-10°C
	KE6_	PTFE packing	-28°C
		Graphite packing	-50°C
	KE7_		-10°C
Maximum differential pressures:	See relevant actuator Technical Information sheet		
Maximum cold hydraulic test pressure of: **Warning:** If the valve is fitted with a bellows it must be removed if hydraulic testing is to be done.	KE4_		60 bar g
	KE6_		60 bar g
	KE7_		38 bar g

K_{VS} values

Size			Nominal size								
			DN15	DN20	DN25	DN32	DN40	DN50	DN65	DN80	DN100
Travel			20 mm						30 mm		
Standard trims	Full port	Equal %	4	6.3	10	16	25	36	63	100	160
		Linear	4	6.3	10	16	25	36	63	100	160
		Fast opening	4	6.3	10	18	28	50	85	117	180
	Reduced trim 1	Equal %	2.5	4	6.3	10	16	25	36	63	100
		Linear	2.5	4	6.3	10	16	25	36	63	100
	Reduced trim 2	Equal %	1.6	2.5	4	6.3	10	16	25	36	63
		Linear	1.6	2.5	4	6.3	10	16	25	36	63
	Reduced trim 3	Equal %	1.0	1.6	2.5	4	6.3	10	16	25	36
		Linear	1.0	1.6	2.5	4	6.3	10	16	25	36
	Reduced trim 4	Equal %	-	1.0	1.6	-	-	-	-	-	-
		Linear	-	1.0	1.6	-	-	-	-	-	-
	Reduced trim 5	Equal %	-	-	1.0	-	-	-	-	-	-
		Linear	-	-	1.0	-	-	-	-	-	-
Micro flute			-	0.5	0.5	-	-	-	-	-	-
			0.2	0.2	0.2	-	-	-	-	-	-
			0.1	0.1	0.1	-	-	-	-	-	-

Travel			20 mm						30 mm		
Low noise trim	Full port		4	6	8	17	20	27	55	63	90
	Reduced trim 1	Linear	3.5	5	6	12	13	15	35	40	60
	Reduced trim 2	Linear	3	4	4.5	7	7	7	30	33	40

Dimensions for the SPIRA-TROL (approximate) in mm

Valve size	A Screwed BSP	A1 Flanged* PN16, PN25 and PN40 JIS 10 KS 10	B Screwed BSP	C Screwed BSP	C1 Flanged PN25 and PN40 JIS 20 KS 20	C2 Extended bonnet	C2 Bellows sealed bonnet	D	E Thread
DN15	130	130	40	103	103	237	237	69	M8
DN20	155	150	45	103	103	237	237	69	
DN25	160	160	50	103	103	237	237	69	
DN32	185	180	60	132	132	267	267	69	
DN40	205	200	65	132	132	267	267	69	
DN50	230	230	80	127	127	267	267	69	
DN65	-	290	-	-	201	359	368	81	M12
DN80	-	310	-	-	201	359	368	81	
DN100	-	350	-	-	216	375	381	81	

Note: The PN16 flanges for the DN65 KE73 sizes have 4 bolt holes as standard; 8 bolt holes are available on request.

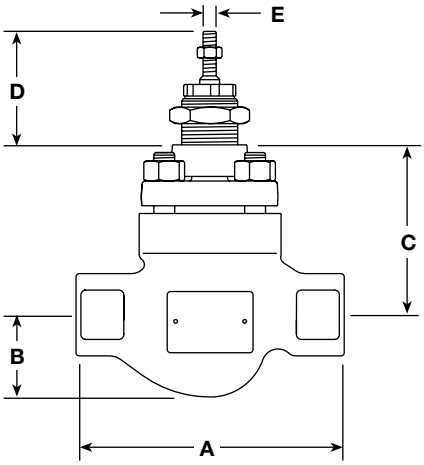

Screwed version

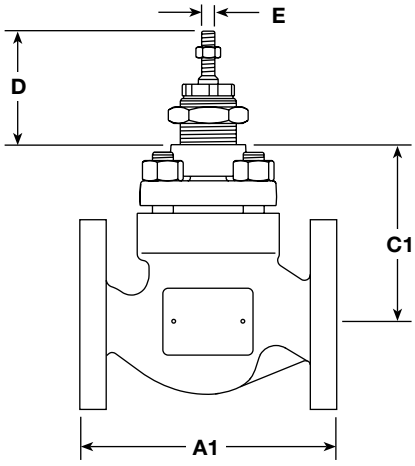

Flanged version

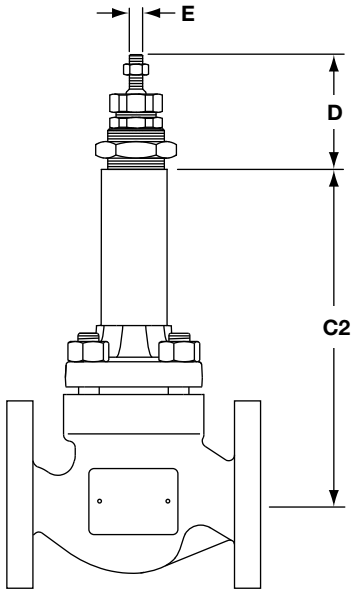

Bellows sealed or extended bonnet version

Weights for the SPIRA-TROL (approximate) in kg

Valve size	KE43	KE61	KE63	KE71	KE73	Additional bellows and extended bonnet
DN15	6.0	4.5	5.5	4.5	5.5	4.5
DN20	6.8	5.5	6.8	5.5	6.8	4.5
DN25	7.0	6.0	7.0	6.0	7.0	4.5
DN32	13.5	11.5	13.5	11.5	13.5	5.5
DN40	14.0	12.0	14.0	12.0	14.0	5.5
DN50	17.0	13.0	17.0	13.0	17.0	5.5
DN65	35.0	-	35.0	-	35.0	10.0
DN80	40.0	-	40.0	-	40.0	10.0
DN100	54.0	-	54.0	-	54.0	13.0

Dimensions / weights for the PN actuator range (approximate) in mm and kg

Actuator range	F	G	H	J	Weight	
					Actuator	With handwheel
PN1500 and PN2500	405	1 114	-	-	55	-
PN1600 and PN2600	465	1 116	-	-	70	-
PN9100E and variants	275	170	55	225	6	+ 5.86
PN9100R and variants	275	170	140	225	6	+ 2.50
PN9200E and variants	300	300	55	225	17	+ 7.20
PN9200R and variants	300	300	140	225	17	+ 3.77
PN9320E and variants	325	390	65	350	27	+ 7.20
PN9320R and variants	325	390	150	350	27	+ 3.77
PN9330E and variants	335	390	65	350	27	+ 7.20
PN9330R and variants	335	390	150	350	27	+ 3.77

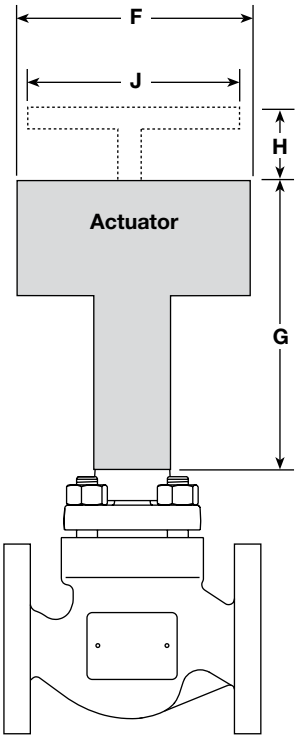

Dimensions / weights for the EL actuator range (approximate) in mm and kg

Actuator range	F	G	Weight
EL3500	135 x 161	242	1.3
EL3500 SE	135 x 161	284	2.4
EL3500 SR	135 x 161	284	2.4
EL560_	177	460	4.5
EL561_	177	460	4.8
EL562_	177	460	5.2
EL563_	177	506	7.0
EL564_	225	569	10.0
EL565_	227	807	20.0
EL506_	162	445	8.7
EL7200 series	100	471	3.0

Spare parts

SPIRA-TROL

The spare parts available are shown in solid outline. Parts drawn in broken line are not supplied as spares.

Note: When placing an order for spare parts please specify clearly the full product description as found on the label of the valve body, as this will ensure that the correct spare parts are supplied.

Available spares - KE, KF and KL

Actuator clamping nut		**A**
Gasket set (Non-bellows sealed)		**B, G**
Stem seal kits	**PTFE** chevrons	**C**
	PTFE to **Graphite** conversion kit	**C1**
	Graphite packing	**C2**
Plug stem and seat kit	* **Equal percentage trim** (No gaskets supplied)	**D, E**
	Fast opening trim (No gaskets supplied)	**D1, E**
	Linear trim (No gaskets supplied)	**D2, E**
PTFE or PEEK	Soft seat seal	**H**

* Specify if reduced trim.

How to order spares
Always order spares by using the description given in the column headed 'Available spares', and state the size and type of valve including the full product description of the product.

Example: 1 - PTFE stem seal kit for a Spirax Sarco DN25 SPIRA-TROL two-port KE43 PTSUSS.2 K_{VS} 10 control valve.

How to fit spares
Full fitting instructions are given in the Installation and Maintenance Instructions supplied with the spare.

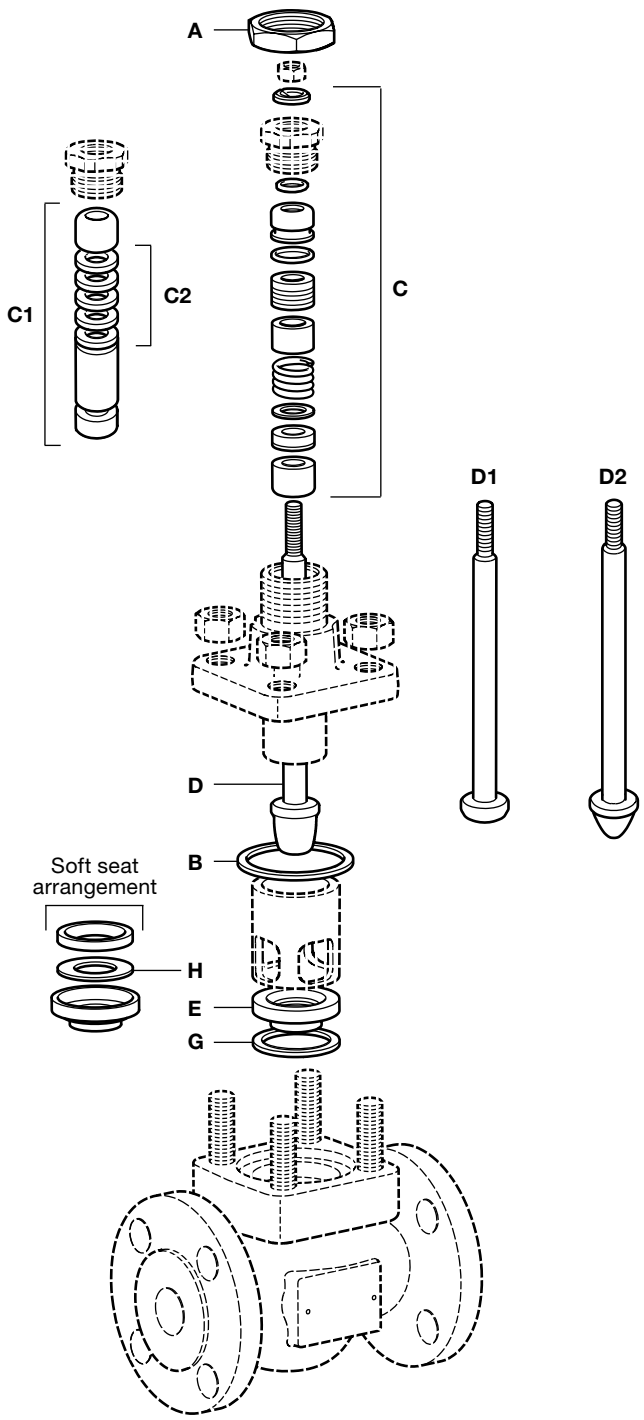

Spare parts

SPIRA-TROL with bellows seal (Type B and C) DN15 to DN100

The spare parts available are shown in solid outline. Parts drawn in broken line are not supplied as spares.

Note: When placing an order for spare parts please specify clearly the full product description as found on the label of the valve body, as this will ensure that the correct spare parts are supplied.

Available spares - K and L series

Actuator clamping nut		**A**
Gasket set (Bellows sealed)		**B, G**
Stem seal kits	**PTFE** chevrons	**C**
	PTFE to **Graphite** conversion kit	**C1**
	Graphite packing	**C2**
Plug stem and seat kit	* **Equal percentage trim** (No gaskets supplied)	**D3, E**
	Fast opening trim (No gaskets supplied)	**D4, E**
	Linear trim (No gaskets supplied)	**D5, E**
Bellow seal assembly		**F**
PTFE soft seal		**H**

* Specify if reduced trim.

How to order spares

Always order spares by using the description given in the column headed 'Available spares', and state the size and type of valve including the full product description of the product.

Example: 1 - PTFE stem seal kit for a Spirax Sarco DN25 SPIRA-TROL two-port KE43B TSUSS.2 K_{VS} 10 control valve.

How to fit spares

Full fitting instructions are given in the Installation and Maintenance Instructions supplied with the spare.

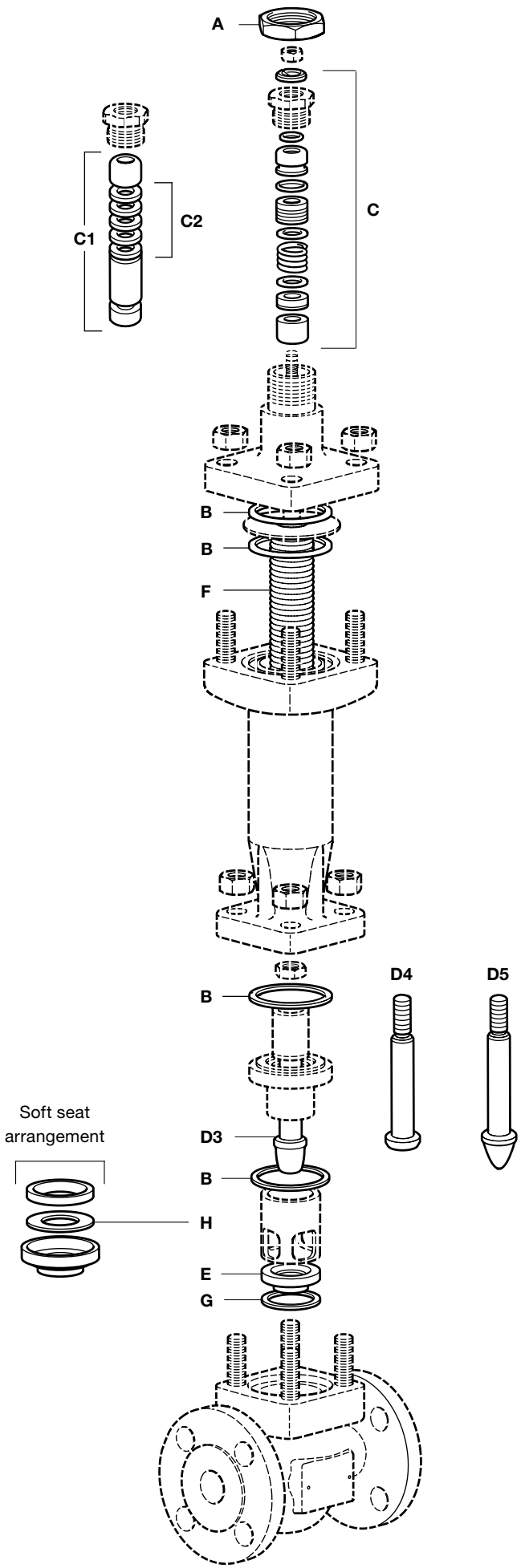

Spare parts

SPIRA-TROL with bellows seal (Type D)

The spare parts available are shown in solid outline. Parts drawn in broken line are not supplied as spares.

Note: When placing an order for spare parts please specify clearly the full product description as found on the label of the valve body, as this will ensure that the correct spare parts are supplied.

Available spares - KE_B, KF_B and KL_B

Actuator clamping nut		**A**
Gasket set (Bellows sealed)		**B, G**
Stem seal kit	**Graphite** secondary seal and gasket set	**C2**
Plug stem and seat kit	* **Equal percentage trim** (No gaskets supplied)	**D3, E**
	Fast opening trim (No gaskets supplied)	**D4, E**
	Linear trim (No gaskets supplied)	**D5, E**
Bellows seal assembly		**F**
PTFE or PEEK	soft seat seal	**H**

* Specify if reduced trim.

How to order spares
Always order spares by using the description given in the column headed 'Available spares', and state the size and type of valve including the full product description of the product.

Example: 1 - PTFE stem seal kit for a Spirax Sarco DN25 SPIRA-TROL two-port KE43B TSUSS.2 K_{VS}10 control valve.

How to fit spares
Full fitting instructions are given in the Installation and Maintenance Instructions supplied with the spare.

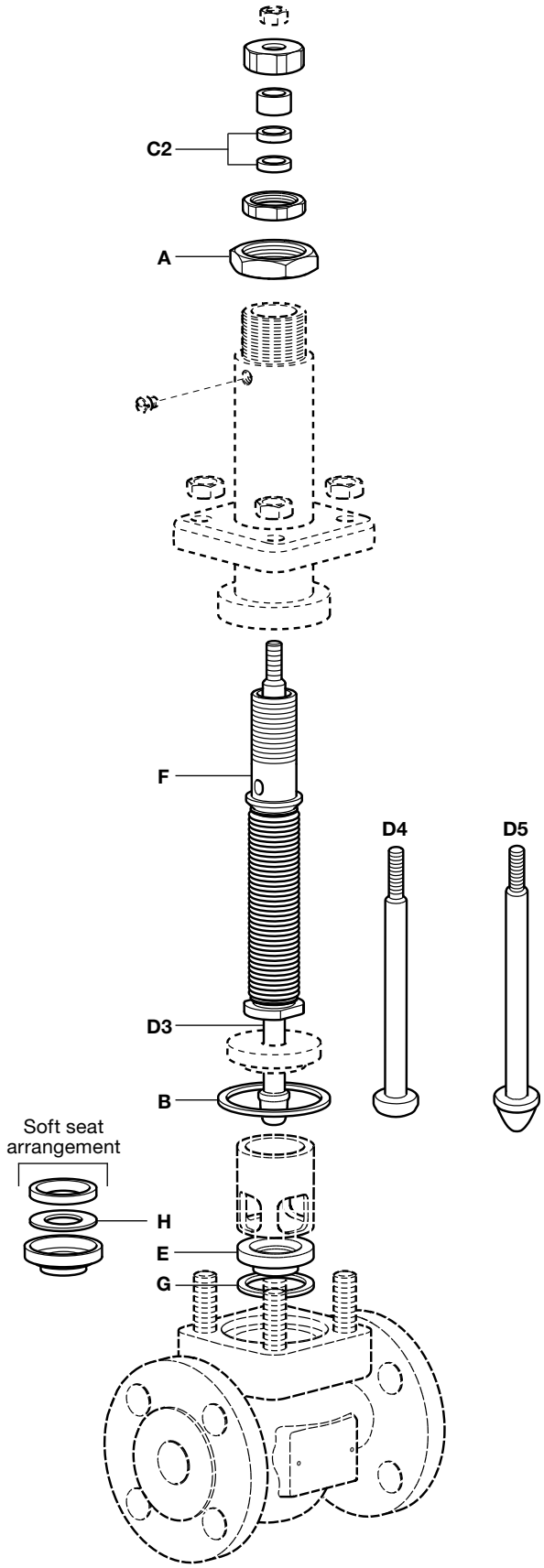

SPIRA-TROL selection guide:

Valve size	DN15, DN20, DN25, DN32, DN40, DN50, DN65, DN80 and DN100	**DN25**
Valve series	K = K series 2-port control valve	**K**
Valve characteristic	E = Equal percentage F = Fast opening L = Linear	**E**
Flow direction	T = Flow over plug (not available for low noise trim) Blank = Flow under plug	
Body material	4 = Carbon steel 6 = Stainless steel 7 = SG iron	**4**
Connections	1 = Screwed 3 = Flanged	**3**
Stem sealing	P = PTFE B = Bellows / PTFE chevron seals C = Bellows / Graphite seals D = Bellows / Graphite secondary seals H = Graphite	**P**
Seating	T = 431 stainless steel G = PTFE soft seat K = PEEK soft seat S = 316L stainless steel W = 316L with stellite 6 facing	**T**
Type of trim	S = Standard trim P = Low noise cage	**S**
Trim balancing	U = Unbalanced	**U**
Bonnet type	S = Standard E = Extended (not available if bellows seal selected)	**S**
Bolting	S = Standard H = High temperature	**S**
Series	2 = .2	**.2**
K_{VS}	To be specified	**K_{VS} 10**
Connection type	To be specified	**Flanged PN40**

Please note: The PN16 flanges for the DN65 KE73 sizes have 4 bolt holes as standard; 8 bolt holes are available on request.

Selection example:

DN25	-	K	E		4	3	P	T	S	U	S	S	.2	-	K_{VS} 10	-	Flanged PN40

How to order

Example: 1 off Spirax Sarco DN25 SPIRA-TROL KE43PTSUSS.2 K_{VS} 10 two-port control valve having flanged PN40 connections.